Solar Panel Z-Bracket Roof Mount

LAKE LIFTER
DC POWERED BOAT LIFT MOTORS

Models: LL-SPMB-Z

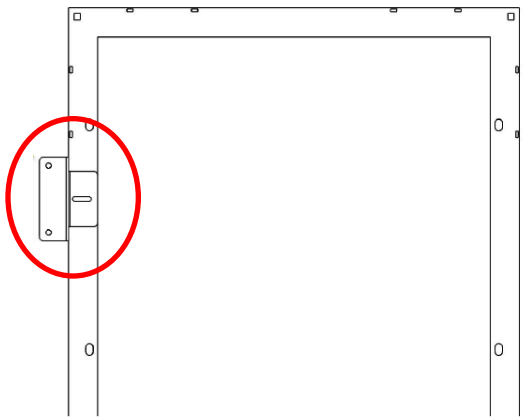

1. Align Z-Brackets with frame holes

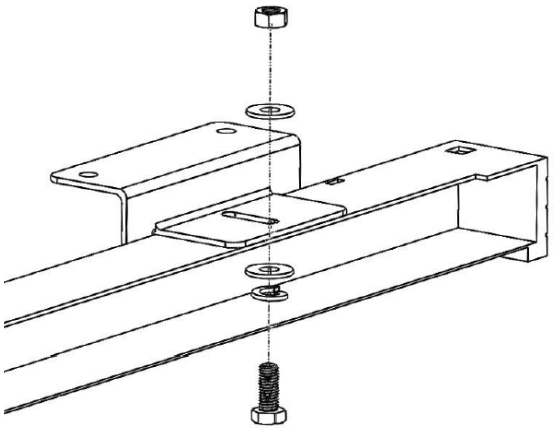

2. Mount Z-Brackets to solar panel frame

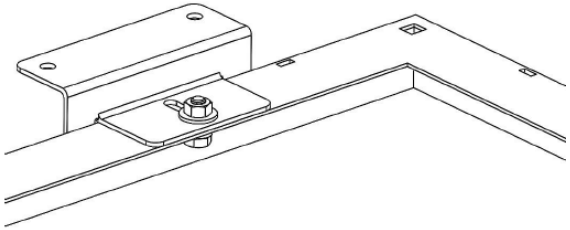

3. Example mounted Z-Bracket on frame

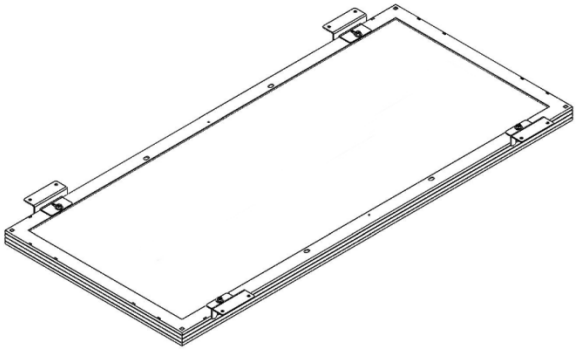

4. Repeat process for all four Z-Brackets

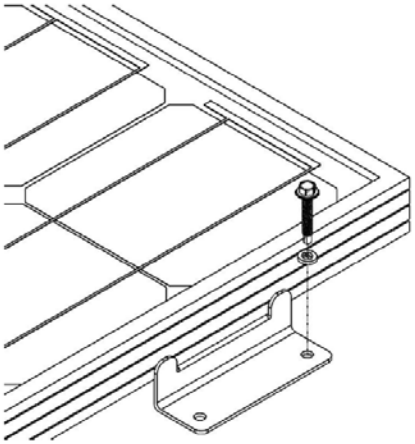

5. Connect Wire 2-3 prior to mounting!
Mount Z-bracket to desired surface.

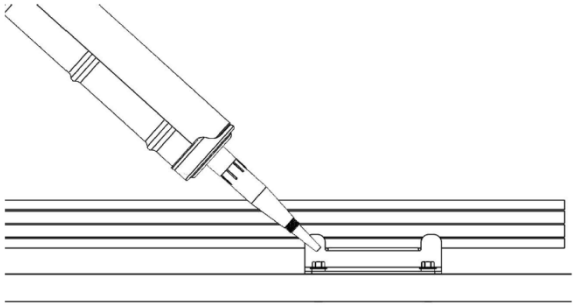

6. Use silicone or tar to prevent leaks.